TAMD74A-A, TAMD74A-B, TAMD74C-A, TAMD74C-B, TAMD74L-A, TAMD74L-B, TAMD74P-A, TAMD74P-B, TAMD75P-A

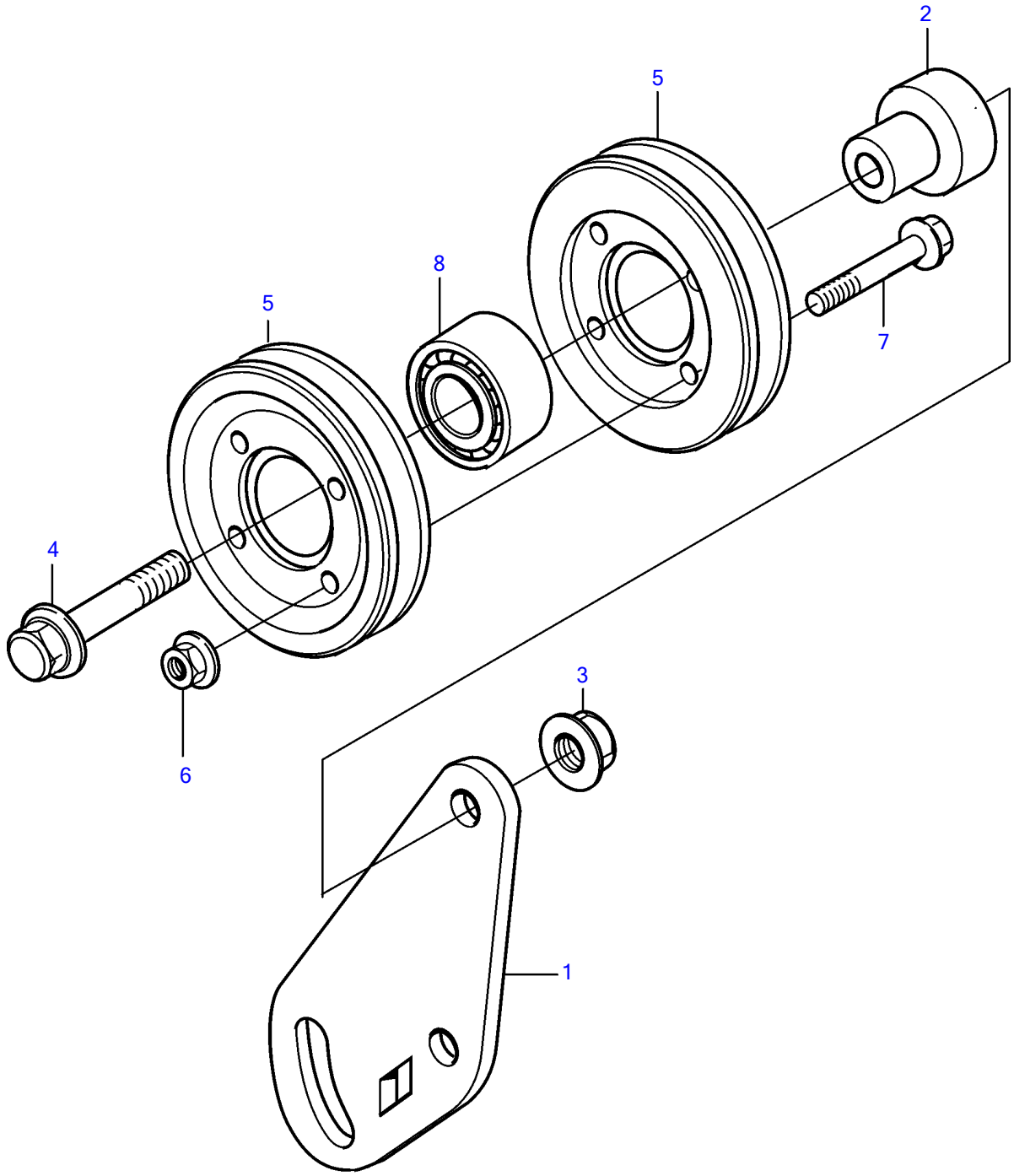

17528

TAMD74A-A, TAMD74A-B, TAMD74C-A, TAMD74C-B, TAMD74L-A, TAMD74L-B, TAMD74P-A, TAMD74P-B, TAMD75P-A

REF	PART NO.	QTY	DESCRIPTION
1	3829032	1	Plate
2	9519488	1	Shaft
3	979230	1	Flange nut
4	965195	1	Flange screw
5	3195639	2	V-belt pulley
6	949278	4	Flange lock nut
7	965176	4	Flange screw
8	3035574	1	Ball bearing